Arbuda®

a unique innovation, with trust and quality...

B. Metal dial thermometer

Bottom Connection

Back Connection

Every Angle Mounting

Special Features

- Stainless steel case & stem
- Stem length available from 50 mm
- Bottom / back / every angle entry
- Silicon oil filled (optional)
- With or without thermowell
- External zero adjustment (optional)
- Standard followed EN 13190.

Application

- Chemicals
- Refinery
- Fertilizer
- Petrochemicals
- Pharmaceutical
- Power
- Cement
- Sugar
- Food
- Beverages
- Pulp
- Paper
- Allied process industries Which are having corrosive media / environment

CE

Specifications

Standard Version : 40 mm & 50 mm =Range up to 300 °C Max.,
63 mm = Range up to 300 °C Max,
80 mm, 100 mm, 125 mm & 150 mm = Range up to 500 °C Max.
(For compound ranges, refer range table)

Accuracy	:	Class 1 as per EN 13190
Ambient temperature	:	-25°C to 65 °C
Operating pressure	:	15 kg/cm² (without thermowell)
Over range limit	:	110% of full scale
Stem diameter	:	10 mm (Standard) Optional 6 mm, 8 mm, 12 mm
Process connection	:	½" BSP (M) fixed

Case, Bezel & Clamp	:	AISI 304 SS
Stem & Connection	:	AISI 316 SS
Joints	:	TIG argon arc welding
Sensing Element	:	Bi - metal strip coiled

Protection	:	IP 68
Dial	:	Aluminum, black graduation on white background
Pointer	:	Aluminum, black coloured, Slotted zero adjustable & Fixed for NS 40 mm, 50 mm & 63 mm
Zero adjustment	:	Externally for mounting type 8 & 14, (Except NS 40 mm, 50 mm & 63 mm)
Window	:	Toughened Glass
Gasket	:	Neoprene

Standard version : Silicon oil filled

Accuracy	:	Class 1 as per EN 13190
Ambient temperature	:	Maximum 65°C
Window	:	Toughened Glass (Plexi Glass Optional)
Dampening liquids	:	Silicon Oil
Gasket & filling Plug*	:	Viton
Other features	:	Refer Specification of Standard Version

*Gasket & Filling plug of Viton.

Nominal range, measuring ranges & limits of error as per EN 13190

Nominal Range (°C)	Measuring Range (°C)	Limits of Error (± °C)
-20 to +40	-10 to +30	1
-20 to +60	-10 to +50	1
-20 to +120	-10 to +110	2
-30 to +30	-20 to +20	1
-30 to +50	-20 to +40	1
-30 to +70	-20 to +60	1
-40 to +40	-30 to +30	1
-40 to +60	-30 to +50	1
-100 to +60	-80 to +40	2
0 to 60	10 to 50	1
0 to 80	10 to 70	1
0 to 100	10 to 90	1
0 to 120	10 to 110	2
0 to 160	20 to 140	2
0 to 200	20 to 180	2
0 to 250	30 to 220	2.5
0 to 300	30 to 270	5
0 to 400	50 to 350	5
0 to 500	50 to 450	5
0 to 600	100 to 500	10

Plot no : E-11/1,SEC - 26 ,G.I.D.C,Ganghinagar-382028,Gujarat ,INDIA. M.: 9328297128/9033711390 . (O):079-23287990
Web.:www.arbudainstruments.com Mail at: info@arbudainstruments.com,arbudainst@yahoo.com

Arbuda®

a unique innovation, with trust and quality...

B. Metal dial thermometer

Dimensions - Standard Version

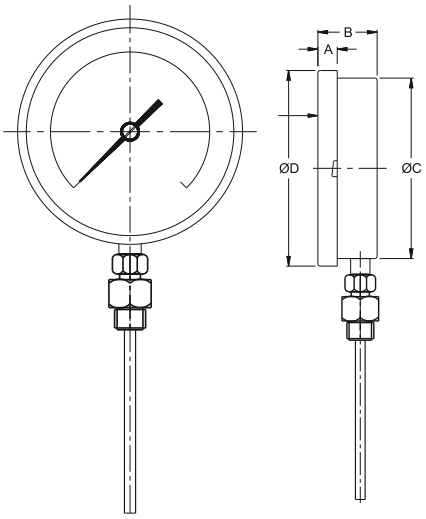

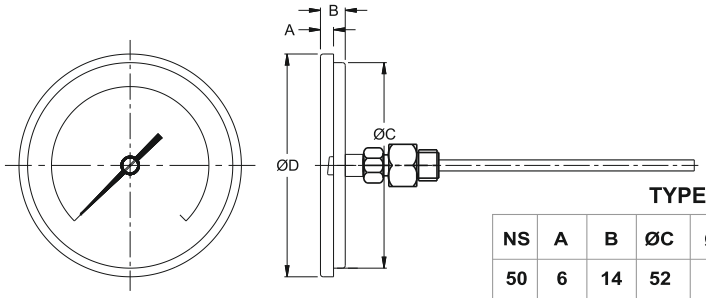

TYPE 4

NS	A	B	ØC	ØD	Approx. Wt.#
50	6	14	52	58	115.0
63	12	18	63	70	150.0
80	12	22	80	90	250.0
100	12	22	100	111	350.0
125	15	22	119	132	500.0
150	15	22	149	161	750.0

TYPE 2

NS	A	B	ØC	ØD	Approx. Wt.#
63	12	46	63	70	200.0
80	12	46	80	90	250.0
100	12	46	100	111	500.0
125	15	46	119	131	750.0
150	15	46	149	161	1000.0

(# Weight in grams with box for 300 mm stem length.)

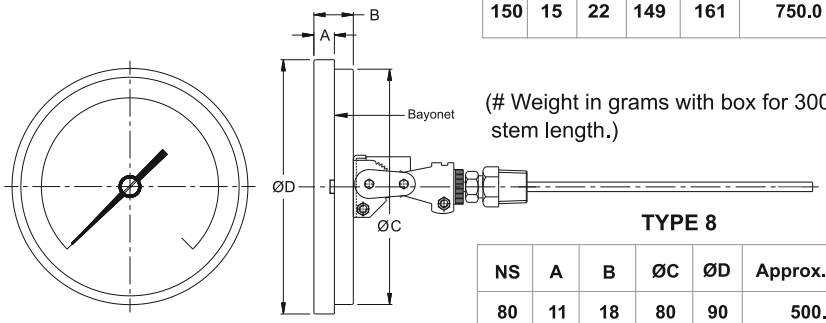

(# Weight in grams with box for 300 mm stem length.)

TYPE 8

NS	A	B	ØC	ØD	Approx. Wt.#
80	11	18	80	90	500.0
100	12	22	100	111	750.0
125	15	22	119	132	900.0
150	15	22	149	161	1000.0

Notes : • Drawings are not to scale. • All Dimensions are in mm. • NS = Nominal Size.

Range Table

Range, stem OD & stem length selection table

The following table indicates the minimum and maximum stem lengths in mm, per stem diameter per range. The lower values indicated are the minimum immersion length (below thread) for all type of threads. During stem length selection, please select between the limits mentioned below.

(Range) °C	Ø 6 mm/ 6.34 mm. Stem Length Min. / Max.	Ø 8, 9.5 & 10 mm. Stem Length Min. / Max.	Ø 12 mm. Stem Length Min. / Max.
-20 /40	115 / 500	95 / 600	95 / 600
-20 /60	95 / 500	75 / 600	75 / 600
-20 / 120	65 / 500	55 / 600	55 / 600
-30 / 30	115 / 500	95 / 600	95 / 600
-30 / 50	95 / 500	75 / 600	75 / 600
-30 / 70	85 / 500	55 / 600	75 / 600
-40 / 40	95 / 500	75 / 600	75 / 600
-40 / 60	85 / 500	75 / 600	75 / 600
-80 / 80	65 / 500	55 / 600	55 / 600
0 / 60	115 / 500	95 / 600	95 / 600
0 / 80	95 / 500	75 / 600	75 / 600
0 / 100	65 / 500	50 / 600	75 / 600
0 / 120	50 / 500	40 / 600	55 / 600
0 / 160	45 / 500	35 / 600	55 / 600
0 / 200	40 / 500	30 / 600	45 / 600
0 / 250	45 / 500	45 / 600	45 / 600
0 / 300	65 / 500	55 / 600	55 / 600
0 / 400	55 / 500	45 / 600	45 / 600
0 / 500	55 / 500	45 / 600	45 / 600

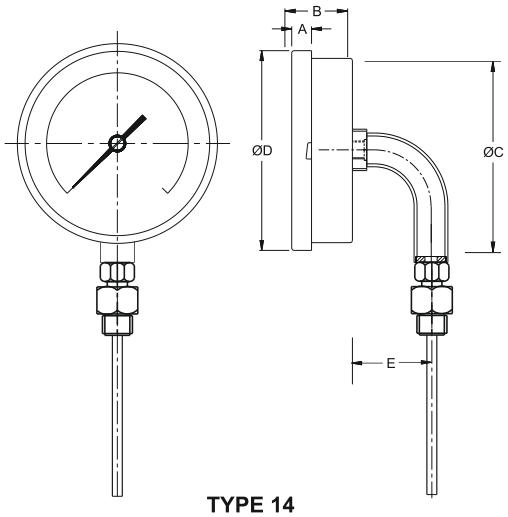

TYPE 14

NS	A	B	ØC	ØD	E	Approx. Wt.#
63	12	18	66	70	35	150.0
80	11	22	80	90	35	200.0
100	15	22	100	111	35	250.0
125	15	22	119	132	35	350.0
150	15	22	149	161	35	500.0

(# Weight in grams with box for 300 mm stem length.)

Plot no : E-11/1,SEC - 26 ,G.I.D.C,Ganghinagar-382028,Gujarat ,INDIA. M.: 9328297128/9033711390 . (O):079-23287990
Web.:www.arbudainstruments.com Mail at: info@arbudainstruments.com,arbudainst@yahoo.com

Arbuda®

a unique innovation, with trust and quality...

B. Metal dial thermometer

Dimensions - Standard Version

Note : We offer National / International Scales like °C, °F & Dual Scale in °C & °F & Scales as per the requirement can be provided on request. Following are the example tables for ranges in °C.

Standard Ranges

Positive range single scale in °C									
0/60	0/80	0/100	0/120	0/160	0/200	0/250	0/300	0/400	0/500
Compound range single scale in °C									
- 20 / 40	- 20 / 60	- 20 / 120	- 30 / 30	- 30 / 50	- 30 / 70	- 40 / 40	- 40 / 60	- 80 / 80	

ACCESSORIES (* Refer datasheet for Thermowells) Note : Other Scales are available on request.

* **Thermowell**

How To Order

								Example
Basic Model								
Code		**20**	**25**	**30**	**40**	**45**	**60**	BT
Nominal Size (mm)		50 mm	63 mm	80 mm	100 mm	125 mm	150 mm	X
Type of Mounting								
2	Direct bottom entry	×	✔	✔	✔	✔	✔	X OR XX
4	Direct center back entry	✔	✔	✔*	✔*	✔*	✔*	
8	Every angle back entry	×	×	✔*	✔*	✔*	✔*	
14	Bottom entry through elbow	×	✔	✔*	✔*	✔*	✔*	
* Available with external zero adjustment, Refer option EXZ.								
Pressure Connection								XXX
1BM	1/8" BSP (M) (Stem Dia. Max. 6.35 mm)	✔	✔	×	×	×	×	
1NM	1/8" NPT (M)* (Stem Dia. Max. 6.35 mm)	✔	✔	×	×	×	×	
2BM	¼" BSP (M) (Stem Dia. Max. 6.35 mm)	✔	✔	×	×	×	×	
2NM	¼" NPT (M)* (Stem Dia. Max. 6.35 mm)	✔	✔	×	×	×	×	
3BM	3/8" BSP (M) (Stem Dia. Max. 10 mm)	×	✔	✔	✔	✔	✔	
4BM	½" BSP (M) (Standard) (Stem Dia. Max. 12 mm)	×	✔	✔	✔	✔	✔	
4NM	½" NPT (M)* (Stem Dia. Max. 12 mm)	×	✔	✔	✔	✔	✔	
4MM	M20 x 1.5 (M) (Stem Dia. Max. 12 mm)	×	✔	✔	✔	✔	✔	
2TC	1-½" TRICLOVER** (Stem Dia. Max. 12 mm)	×	✔	✔	✔	✔	✔	

* Not recommended for Revolving/ Swivel connections. ** Without clamp, gasket & bottom mating part.

Process Connection Type (* Welded with stem / case & not suitable for taper threaded connections) — XX

AD Adjustable **FX** Fixed (Standard)* **SL** Revolving / Swivel

Stem Diameter — XX

SD06 6 mm **SD08** 8 mm **SD10** 10 mm (Standard) **SD12** 12 mm

Stem Length (Max. 600 mm) Please specify in mm (Please Refer Page No. 2 for minimum & maximum stem lengths) — 300 mm

Range — 0/100 °C

Refer range table

Optional extras (* Applicable for NS 100 mm & above) — XXX

CBS AISI 316 SS case & bezel (For NS 100 mm & above) * #
LSI Dampening liquid silicon oil (up to 300°C)**
EXZ External zero adjustment **[except NS 40 mm, 50 mm & 63 mm & mounting type 2]**
STP SS tag plate
STG Shatter Proof Glass *
CDD Custom designed dial
TND Tag No. Marking on Dial *
MTC Material test certificateS # #
SCP SS Case & Polycarbonet Window

**Gasket & Filling plug of Viton. (# Consult factory for minimum order quantity & delivery.) # # Material test certificates will be provided for wetted parts only with chemical composition testing. For others, please Consult factory.

Ordering Example: BT - XX - X OR XX - XXX - XX - XXXX - 300 mm - 0/100°C - XXX

For other optional items, please contact factory for delivery and minimum quantity of order.
Note : Specifications and dimensions given in this product catalogue represents the state of engineering at the time of printing. Modifications may take place and materials specified may be replaced by others without prior notice.

Plot no : E-11/1,SEC - 26 ,G.I.D.C,Ganghinagar-382028,Gujarat ,INDIA. M.: 9328297128/9033711390 . (O):079-23287990
Web.:www.arbudainstruments.com Mail at: info@arbudainstruments.com,arbudainst@yahoo.com